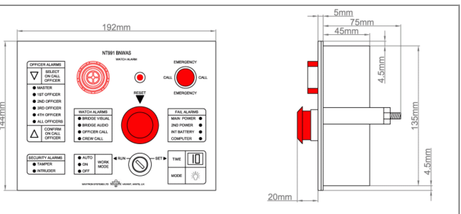


**NT991BNWAS Display Unit Dimensions (mm)**

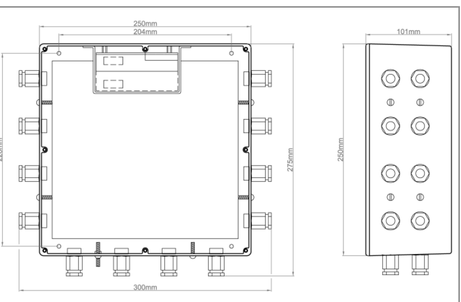


**NT991BNWAS Distribution Unit Dimensions (mm)**

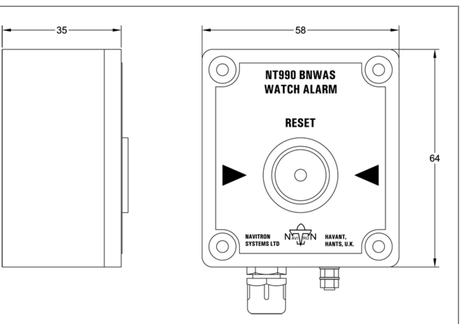


**NT990BNWAS Reset Unit Dimensions (mm)**

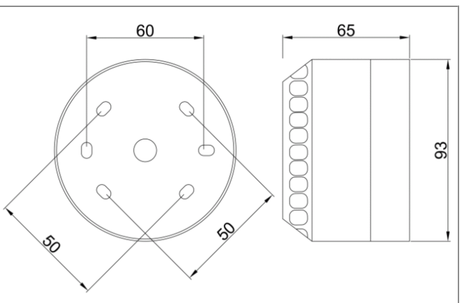


**NT990BNWAS Bridge Visual Alarm Unit (BVA) Dimensions (mm)**

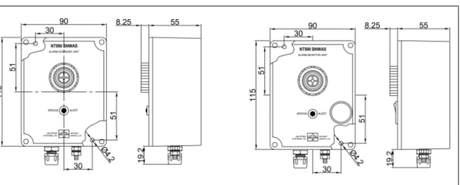


**NT990BNWAS 2nd Stage Cabin Alarm Units (CA / MCA) Dimensions (mm)**

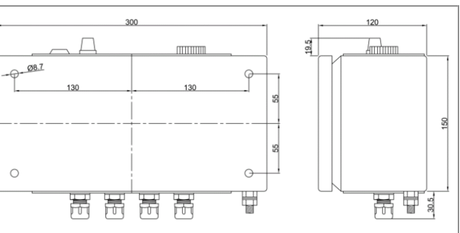


**NT990BNWAS 3rd Stage Switch Unit (ADU) Dimensions (mm)**

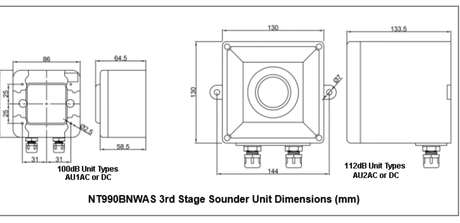


**NT990BNWAS 3rd Stage Sounder Unit Dimensions (mm)**

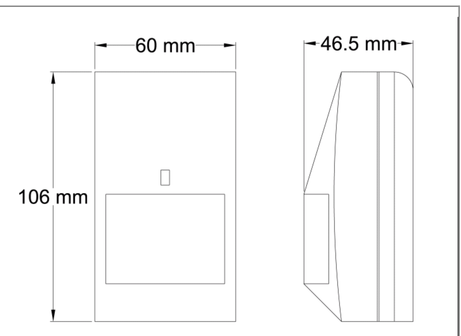


**NT990BNWAS Motion (PIR) Detector Dimensions (mm)**