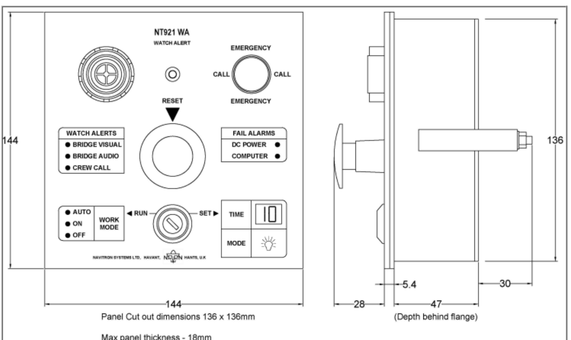

NT921 Watch Alert Display Unit Dimensions (mm)

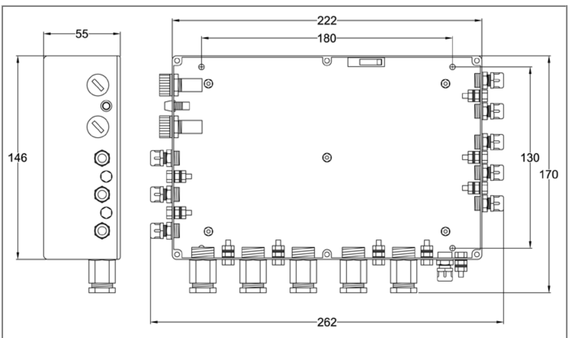

NT921 Watch Alert Distribution Unit Dimensions (mm)

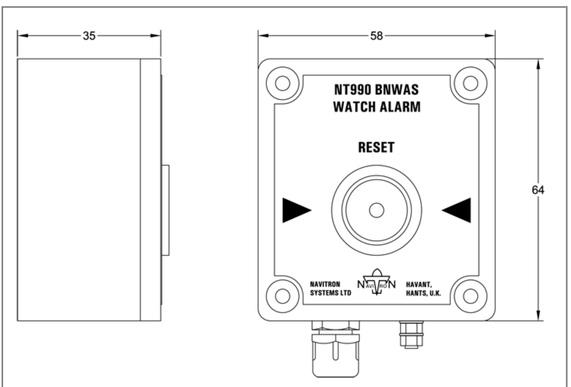

NT921 Watch Alarm Reset Unit Dimensions (mm)

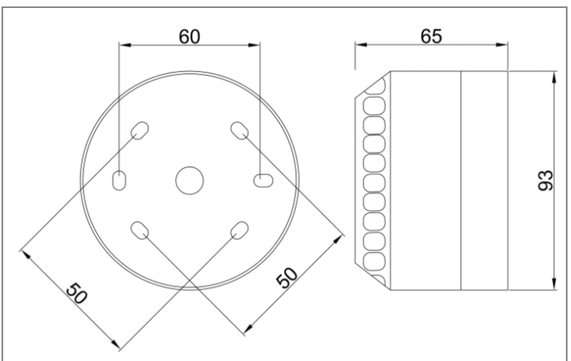

WAS BVA Bridge Visual Alarm Unit Dimensions (mm)

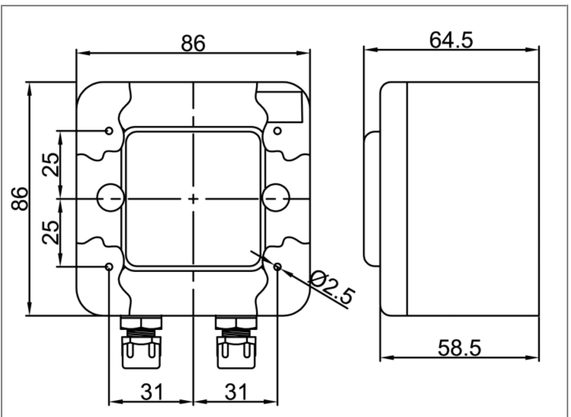

WAS AU1DC Sounder Unit Dimensions (mm)

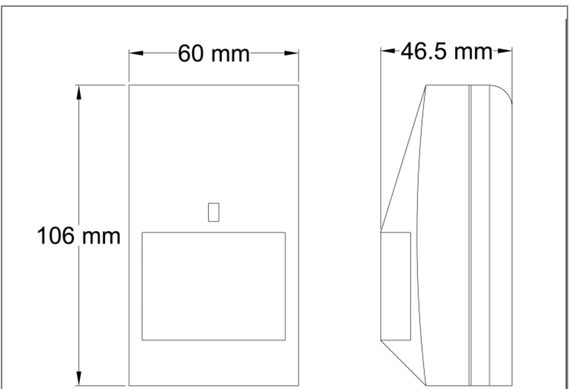

WAS PIR Motion Detector Dimensions (mm)