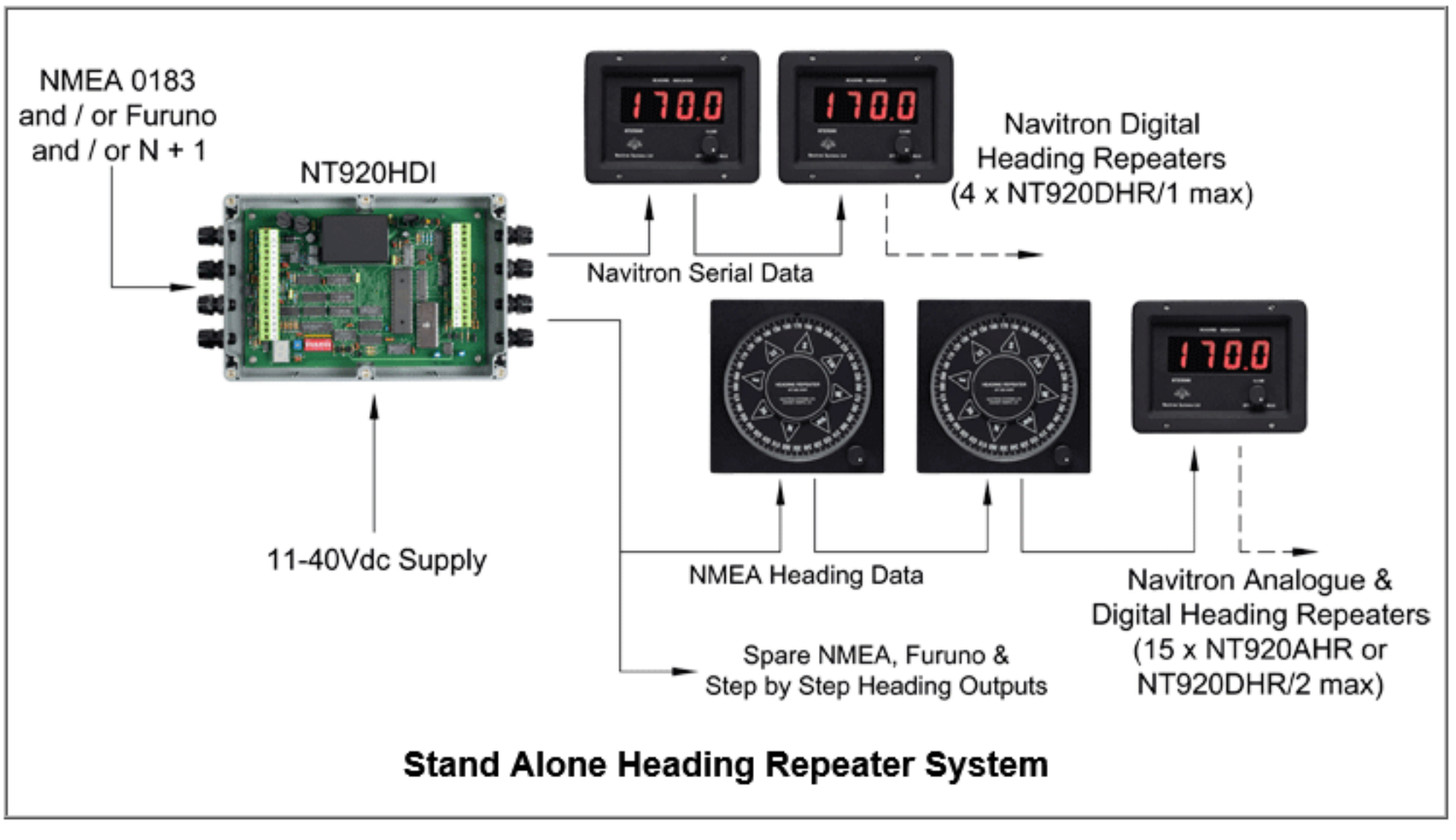

Stand Alone Heading Repeater System

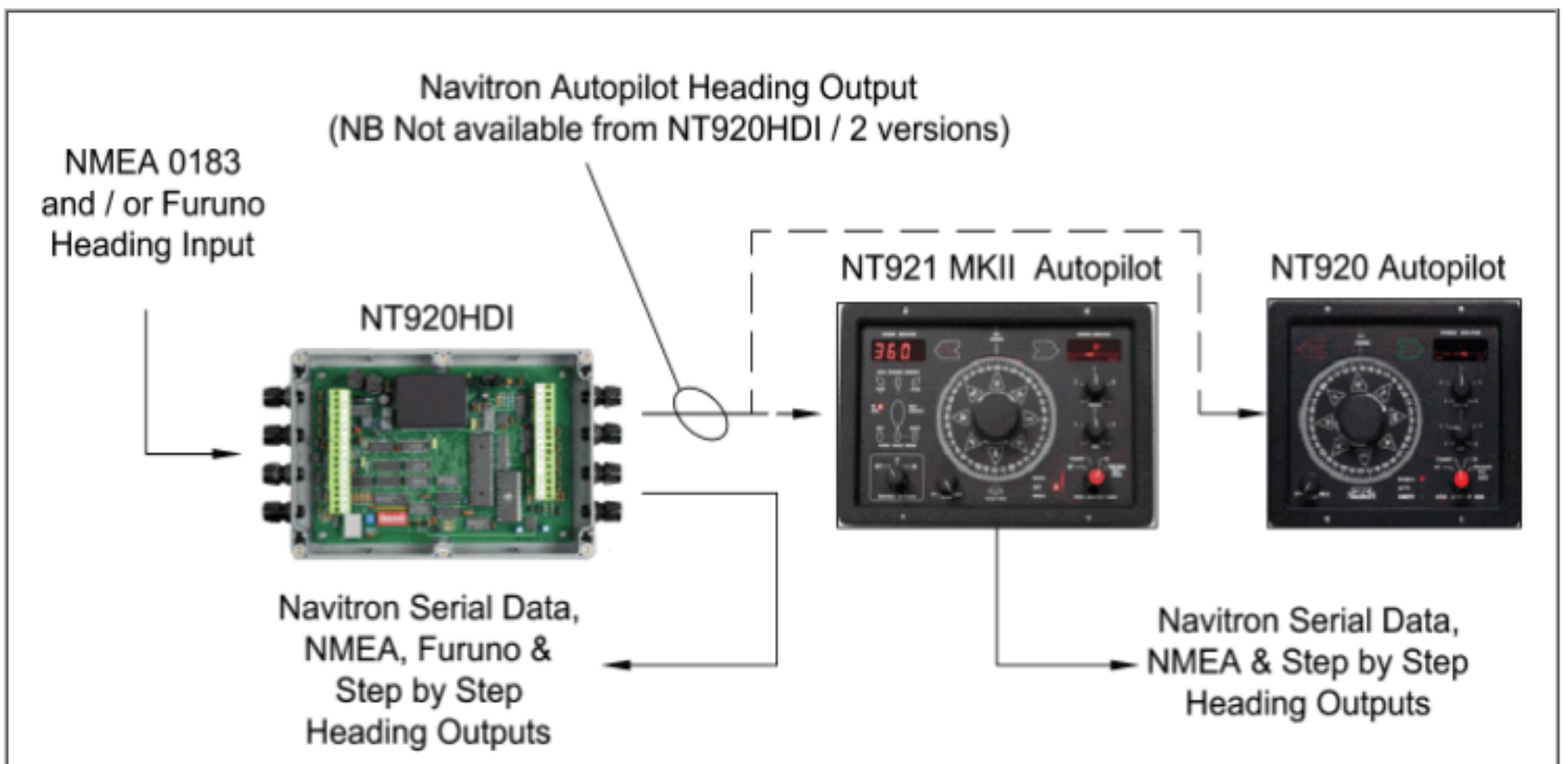

Small Vessel Autopilot System with
Electronic (Fluxgate or GPS) Heading Reference

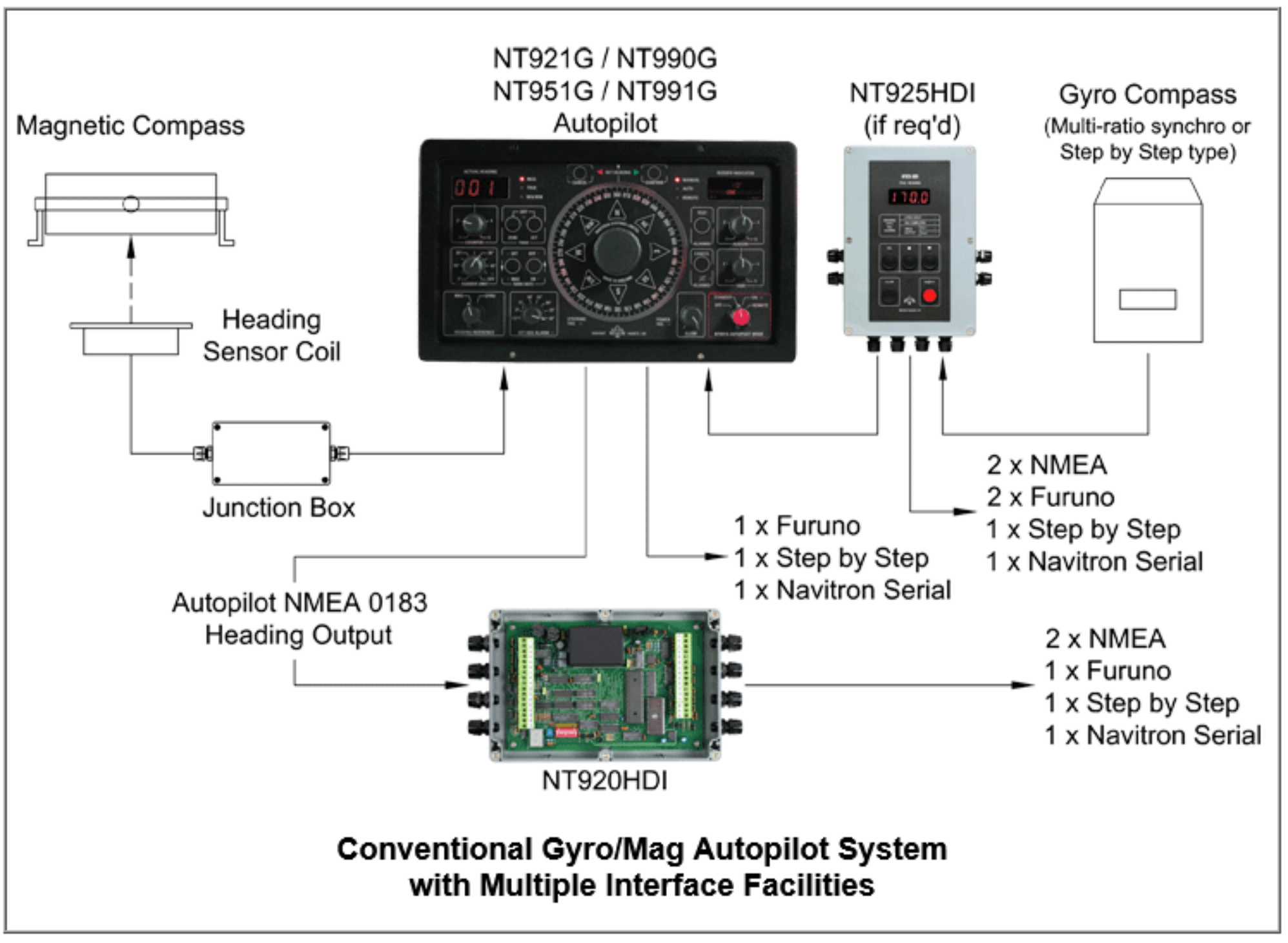

Conventional Gyro/Mag Autopilot System
with Multiple Interface Facilities

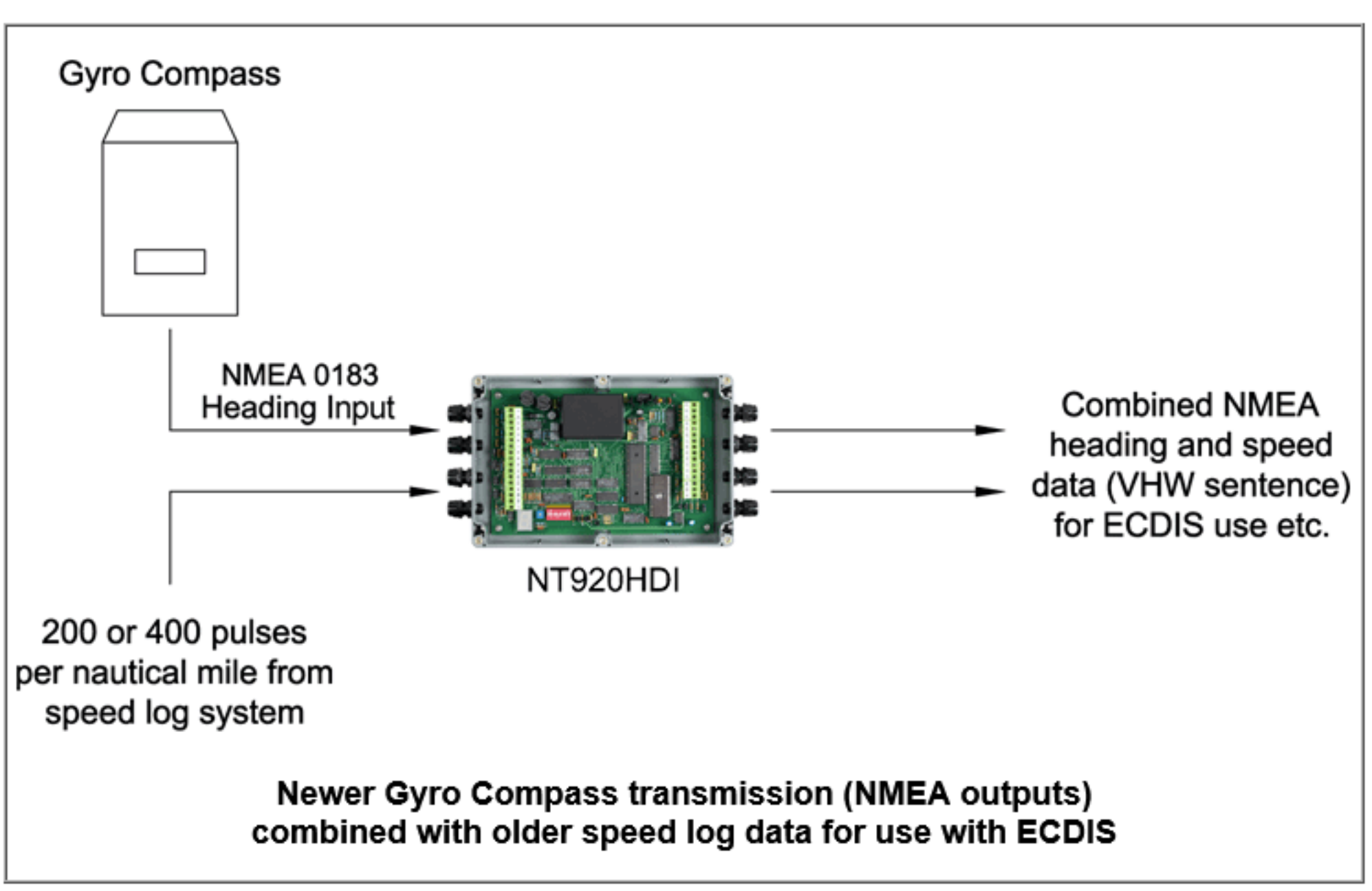

Newer Gyro Compass transmission (NMEA outputs)
combined with older speed log data for use with ECDIS