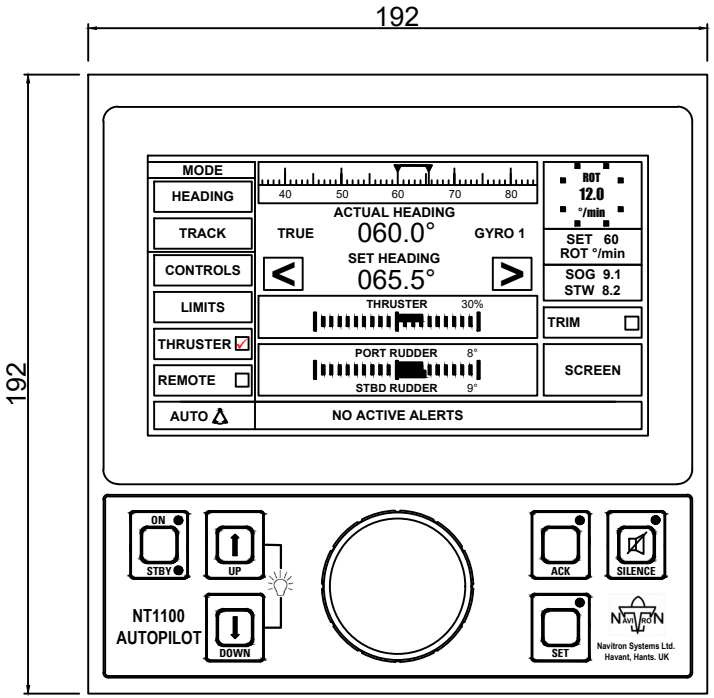

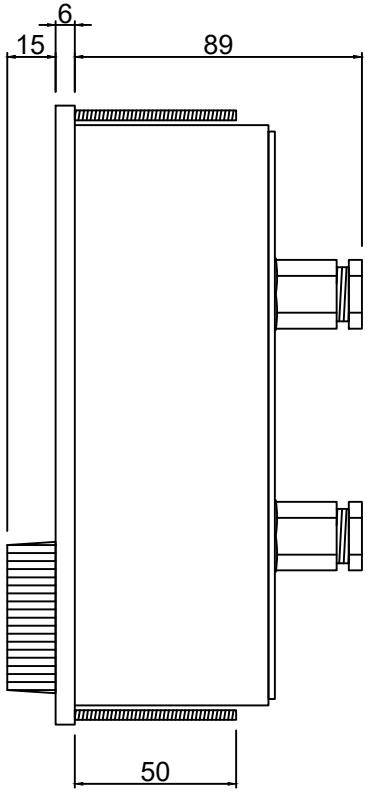

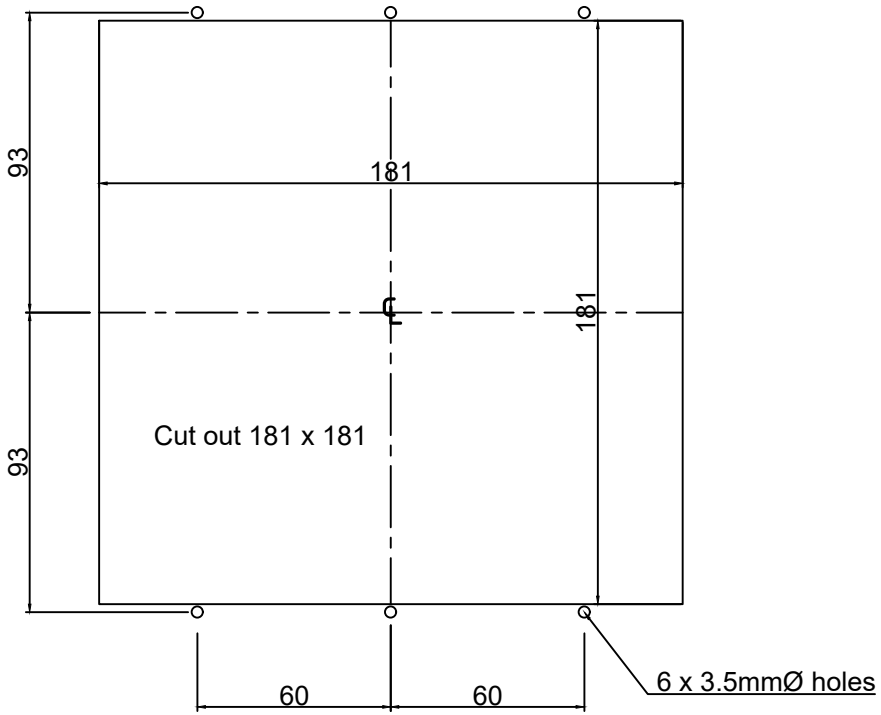

NT1100 AP dimensions
and cut out details

All dimensions in mm

REV 1 - 20/06/23